Guides to Manufacturing and Marketing

CHARCOAL

in the Northeastern States

BY FRED C. SIMMONS

STATION PAPER NO. 95 • NORTHEASTERN FOREST EXPERIMENT STATION • 1957

FOREST SERVICE • U.S. DEPARTMENT OF AGRICULTURE • UPPER DARBY, PA.

RALPH W. MARQUIS, DIRECTOR

Guides to Manufacturing and Marketing

CHARCOAL

in the Northeastern States

by

Fred C. Simmons, *Specialist in Logging and Primary Processing*
Northeastern Forest Experiment Station
Forest Service, U.S. Dept. Agriculture

AN OLD ART REVIVES

CHARCOAL manufacture has become the subject of a tremendous new interest in the Northeast in the past few years. In many communities, retailers have been unable to find enough charcoal to fill the demands--even though in the same localities there are large supplies of surplus wood that could be used in making charcoal. As a result of this unfilled demand, we have received many inquiries from people throughout the Northeast who want to know how to make and market charcoal.

This paper has been prepared to answer their queries. It tells about the equipment, methods, and costs of manufacturing charcoal in small plants in the Northeast, and indicates some of the market opportunities that are open to small producers.

Changing wood into charcoal is an ancient art that has been practiced for centuries in practically all parts of the world. It consists essentially of heating wood in an enclosed space where there is a deficiency of air. Under such conditions the wood glows, but does not burst into flame. This process drives the volatiles out of the wood (water, acids, oils, and tars) and reduces it to practically pure carbon, a product that has many uses.

For about 50 years, around the turn of the century, a large part of the charcoal used in the United States was manufactured more or less as a byproduct of wood-distillation plants. These plants were primarily interested in recovering chemicals from the acids, oils, and tars distilled from the wood. The main chemicals recovered were methanol (wood alcohol) and acetic acid. During World War I, there were about 25 wood-distillation plants operating in the Northeast, most of them in northwestern Pennsylvania and the Catskill region of New York. In recent years, however, most of the markets for methanol, acetic acid, and other products of wood distillation have been taken over by synthetics that are manufactured more cheaply and in a purer form than those obtained from wood distillation. Consequently only one wood-distillation plant remains in operation in the Northeast.

Meanwhile charcoal markets have enlarged and the price has steadily increased. As a result, some of the old wood-distillation plants are now operating to produce charcoal alone, with no attempt to recover other products. Five such plants are now operating in the Northeast.

Along with the retort-produced charcoal, there has always been a certain amount produced in kilns of various types, which are operated for charcoal as the only product. Because of the strong markets and the reasonably good prices, the kiln-charcoal business has expanded until there are now almost 100 producers in the Northeast.

Charcoal, of course, can be manufactured in a variety of ways, with facilities ranging from an inexpensive sod-covered pit to a continuous vertical retort installation costing several hundred thousand dollars. Only three producers in the Northeast are now using sod pits. This method is relatively inefficient; it requires large amounts of labor per ton of production, and makes a dirty product. On the other hand, although continuous vertical retorts require very little labor, they also require a large investment and

call for large quantities of wood daily, which would be expensive and difficult to collect under most northeastern conditions. Two small experimental retorts of this type are now operating in the Northeast.

Therefore, it is believed that a small or medium-size kiln installation is most worthy of consideration for any new charcoal-manufacturing ventures planned in the Northeast. With reasonable care in erection and operation, as good charcoal can be manufactured in a kiln as in the

Very little charcoal is made today in sod-covered pits. This operation was photographed in New Jersey in 1928.

more expensive installations. Kilns have been developed to the point where they can be operated with reasonable efficiency, and with labor and other costs on a scale that make profitable operation possible. Additional research on improvement in kilns and their operation continues.

MARKETS FOR CHARCOAL

THERE is now an excellent general demand for charcoal throughout the Northeast. Current consumption within the 12 Northeastern States is estimated to be over 100,000 tons and is increasing. Current production in the region is believed to be about 30,000 tons. The deficit is made up by imports, mostly from Canada, Michigan, Tennessee, and Arkansas.

Principal Uses

About 85 percent of the charcoal consumed is used for cooking food. Industrial uses, formerly an important outlet, have dwindled significantly. For example, comparatively little charcoal is used today for tobacco curing, for metallurgy, or for the manufacture of chemicals. Activated charcoal for water filtration is now made mostly from pulpmill residues.

Operators of small kiln installations have two main options in the sale of their charcoal:

- They can sell it in bulk (usually packaged in 1-bushel paper or burlap bags) to a jobber or wholesaler (who will usually be located in a large city). From these wholesale markets they will receive from $50 to $70 a ton f.o.b. the plant. The jobber or wholesaler will package a considerable proportion of this charcoal in smaller sacks for sale to individual users, and will resell a portion to industrial users. In some cases the wholesalers engage the producer to do the packaging, at an agreed-upon additional price per sack.

- The producers can package their product in small sacks (2 to 4 pounds) and sell it directly to retailers. From this type of sale they will currently receive 5 cents to 7 cents a pound or $100 to $140 a ton, delivered. Packaging will cost about $15 a ton and delivery at least $5 more. The limitation on this type of marketing is the amount of

charcoal the local market will absorb; for since transportation is involved, the best markets are those closest to home.

Some small producers sell their charcoal directly to consumers. They set up a roadside stand and sell packaged charcoal at retail. Current retail market prices of charcoal are 10 cents to 11 cents a pound.

Regardless of the method of original sale, most charcoal produced is eventually sold to individual users, either for use in a barbecue fireplace at home or for picnic use. Most individual users in the Northeast prefer a "one-shot" package (usually 2, 3, or 4 pounds in weight) that can be put directly on the grate and lighted. Other individuals--those who do considerable barbecuing at home--and most restaurants and dining cars prefer to buy larger packages, usually 5 or 10 pounds. About 60 percent of the charcoal bought in the Northeast reaches the user in the 2- to 4-pound packages, 25 percent in 5- to 10-pound bags, and 15 percent in bushel bags. The bushel bags go mostly to industrial users.

Some of the major marketing problems arise from the fact that the current cooking demand is largely seasonal, being concentrated for the most part in the vacation months from June to September. From October until May the demand for charcoal for this use is at very low levels. This means that producers must (1) shut down during the winter months, (2) cultivate industrial or commercial markets to carry them over the winter, or (3) make some arrangements for stockpiling until the active season. Some northeastern producers have considerable success in getting their retailer-customers to stockpile by selling packaged charcoal during the winter at a somewhat reduced price. Others have succeeded in finding as winter outlets industrial markets or restaurants, or retailers in resort areas in the South.

When a person plans to enter the charcoal-production business, it is recommended that he first try to develop local markets, using established retail outlets such as gas stations, grocery stores, delicatessens, and hardware stores. Because of the probable limitations of these, larger scale producers will of necessity have to sell a portion of their product to wholesalers or other bulk buyers at more distant points. Success will depend upon getting an adequate average price from the several types of outlets.

Types Of Charcoal

Charcoal can be sold as produced--in lump form--or it can be made into briquettes. The small-scale producer catering to local markets has a definite advantage in selling his charcoal in lump form, for briquettes and lump charcoal sell at retail for about the same price. According to representative retailers, most individual customers prefer lump charcoal for cooking purposes. Charcoal in this form is not only easy to ignite, but it burns down more quickly than briquettes to the glowing bed of coals needed for cooking; and many people believed it imparts more flavor to the food. Briquettes, on the other hand, burn long after the typical picnic is completed. Some users quench those remaining with water and save the residues for re-use.

But lump charcoal is bulky, transportation costs are high, and it crushes fairly easily. Lump charcoal also must be stored in a completely dry place, because it is highly hygroscopic and if it absorbs moisture there is some danger of spontaneous combustion. Absorption of moisture deteriorates it in any case.

Briquettes are more compact and durable, and hence they are cheaper and easier to transport and store. Briquettes are usually preferred for cooking only by those users conducting barbecues on a large scale, or by restaurants and dining-car operators who wish to keep a fire burning more or less continuously. For these reasons it is in briquette form that charcoal is usually supplied by producers located at some distance from their markets.

Lump charcoal, to be acceptable for sale to consumers, must be "sized." This is done by passing it over a ½-inch mesh screen to take out fines. The largest chunks must be broken up so that they will pass through a 1-3/4 inch mesh screen. In a small-scale operation, where most of the work is done by hand, this is relatively easy to do without making excessive amounts of unmerchantable fines. On a larger scale operation, where the screening, crushing, and packaging operations are done mechanically, a greater proportion of fines is unavoidable; this creates a problem in disposing of them profitably. Operators of large-scale plants may be forced to consider briquetting to utilize these fines.

PRODUCTION OF CHARCOAL

EXCEPT under unusual circumstances it is recommended that prospective producers of charcoal in the Northeast start on a relatively small scale. A practical small enterprise would require a maximum of 20 to 30 cords of wood a day, which would yield about 7 to 10 tons of charcoal a day. Sufficient raw material for such an enterprise can be obtained easily in many northeastern communities, and this amount of charcoal can readily be sold nearby in many communities.

For enterprises of this size, most Northeastern producers use kilns of one or two types: (1) rectangular kilns made of cinder (not concrete) blocks, following plans developed by the Connecticut Agricultural Experiment Station, New Haven, Connecticut[1]; or (2) dome-shaped (beehive) kilns made of brick. A third type, used to a limited extent, is a small beehive-type kiln made of sheet steel, following plans developed by the Black Rock Forest.[2]

The cinder-block kilns have capacities ranging from 1 to 20 cords, and the brick beehive kilns hold 30 cords or more. The sheet-steel beehive kilns generally have capacities of less than a cord. The size of the enterprise will dictate, to some extent, the type of kiln chosen, although batteries of kilns of any of these three types can be operated efficiently.

Single kilns of each of these types are being operated as sidelines to some other type of business such as farming, sawmilling, or forestry. Some of these single-kiln part-time ventures are quite successful, but generally they are less efficient and less profitable than modest full-time enterprises.

---

[1]Hicock, Henry, and Olsen, A.R. The Connecticut charcoal kiln. Conn. Agr. Expt. Sta. Bul. 431. 47 pp., illus. New Haven. 1951.

[2]Tryon, H.H. A portable charcoal kiln. Black Rock Forest Bul. 4. 20 pp., illus. Cornwall-on-the-Hudson. 1933.

Full-time charcoal manufacturing, using a battery of kilns in rotation, employs labor most efficiently. Kiln operation--including loading, management of the kiln during the burn, and unloading and packaging--takes about 3 to 5 hours of labor per cord. Most of this labor is used during the loading and unloading period. During the carbonization and cooling periods, only incidental attention to the kiln controls is needed. Consequently, on these sideline operations it is necessary to take men off other jobs to work in the kilns during the loading and unloading periods, or to have men wait idle for a kiln to be opened. With a battery of kilns operating on a staggered schedule, it is possible to provide full-time employment for a small crew. Moreover full-time charcoal manufacturing provides opportunity for more efficient wood procurement, management, and sales.

Raw Material

Although charcoal can be made from any raw woody material, most kiln charcoal today is made from slabs and edgings left over from the manufacture of hardwood lumber at nearby sawmills. This class of wood can be purchased in many communities in the Northeast, delivered to a charcoal manufacturing site for from $5.00 to $8.50 a cord. Round wood from the forests in the same communities would cost $12 to $15 a cord.

This price relationship may change in many northeastern communities because many hardwood sawmill operators are installing whole-log debarkers, to make their slabs and edgings acceptable as raw material for paper pulp manufacture. However, it is not considered likely that the price of debarked slabs will increase enough to make them competitive with round wood as raw material for charcoal produced in kilns. Retort producers are shifting back to round wood because of reduction of this price differential, and because the industrial markets, to which they cater, demand a better quality of charcoal (lower ash content). Also the retort plant, which uses outside heat, is less handicapped in use of wood with a high moisture content.

The facts that charcoal can be made in kilns most economically from dry wood, and that slabs dry more quickly than round wood, gives them an additional advantage. In most localities, about 18 months is required to air-dry round wood to approximately 25 percent moisture content.

Slabs can be dried to this same moisture content in about 3 months. At this degree of dryness, the yield of kiln charcoal from hardwood slabs will be about 700 pounds per cord, and from seasoned round wood the yield will be 800 to 900 pounds per cord. The differences in yield of seasoned round wood over seasoned slabwood are not great enough to compensate for the greater initial cost and the longer drying time. A cord of green round wood and a cord of air-dry slabs will produce about identical yields in kilns (700 pounds per cord), but the green wood requires a longer carbonizing cycle.

Dense hardwoods (oak, beech, birch, and maple) are preferred as a raw material for charcoal manufacture in kilns, because they produce high yields of denser more durable charcoal. Use of softwood (pine and hemlock) not only entails lower yields, but the charcoal produced is difficult to market in lump form because it crushes easily, is dirty, and is apt to give off smoke and odor. The softer hardwoods (basswood, poplar, and cucumber) are undesirable for the same reasons. One producer in West Virginia who makes his charcoal exclusively from hickory is able to get a premium price and a preference in the markets because of its denseness and durability.

Most slabwood is purchased in standard lengths, usually 4 feet. Some charcoal producers, generally those who pay the lower prices, buy slabs in the random lengths produced at the sawmill. Most cut them up to 4-foot lengths with a buzz saw at the kiln site, but a few load them directly into the kiln in these random lengths. Loading with the standard lengths is usually easiest and most economical, in that it makes for better packing and higher yields. Some operators make short material into packages and load kilns with a fork-lift truck. This further increases efficiency.

Selecting The Proper Site

One important consideration in selecting a site for a charcoal-kiln installation is air pollution. The gases emitted by the kilns during the carbonization cycle have an unpleasant odor and some charcoal producers located close to town have run into difficulties because of it. It is recommended that kilns be located a mile or more from the nearest neighbors, the distance depending on wind currents in the locality.

There are several other points to be considered in choosing a site for charcoal production. A nearby water supply is desirable, but not essential. The water needed for fire-protection purposes and for drinking and washing can be readily hauled in. Electricity, while not essential, will be found to be extremely useful. If round wood is to be used as raw material, a large drying and storage area may be needed. Slabs can often be purchased in dry enough condition to be loaded directly into the kilns, but some storage area to provide a reserve supply in case of a delay in deliveries is often desirable.

A prospective producer should consider an area of 3 to 5 acres of fairly level, reasonably well-drained land, as a minimum. There should be adequate means of ingress for trucks loaded with wood and supplies, and of egress for those loaded with manufactured charcoal. If a railroad siding is available, so much the better.

CINDER-BLOCK KILN

The minimum size installation of cinder-block kilns, which would provide full support and employment of an operator and about four laborers, would consist of a battery of about seven 9-cord kilns. Cost of erecting a single 9-cord kiln, including materials and labor, is about $1,200. Total investment required for a venture of this size, exclusive of working capital, would be about $20,000.

Construction

Each 9-cord kiln is about 10 feet wide and 20 feet long (outside dimensions) and 10 feet high. It is built on a poured concrete floor about 6 inches thick. The wall has footings that go to a depth well below the local frost line. The kiln has three walls made of a single layer of high-quality[3] 8- by 16-inch cinder block, either 8 or 12 inches thick.

[3]Such block is available in some localities as a standard product, but not in others. The U. S. Forest Products Laboratory suggests the following specifications: 2,200 pounds of cinders; 1,000 pounds of limestone screenings; 500 pounds of 1/8-inch screened limestone aggregate; 500 pounds of Portland cement. Water/cement ratio of about 0.9. Blocks should be moist-cured.

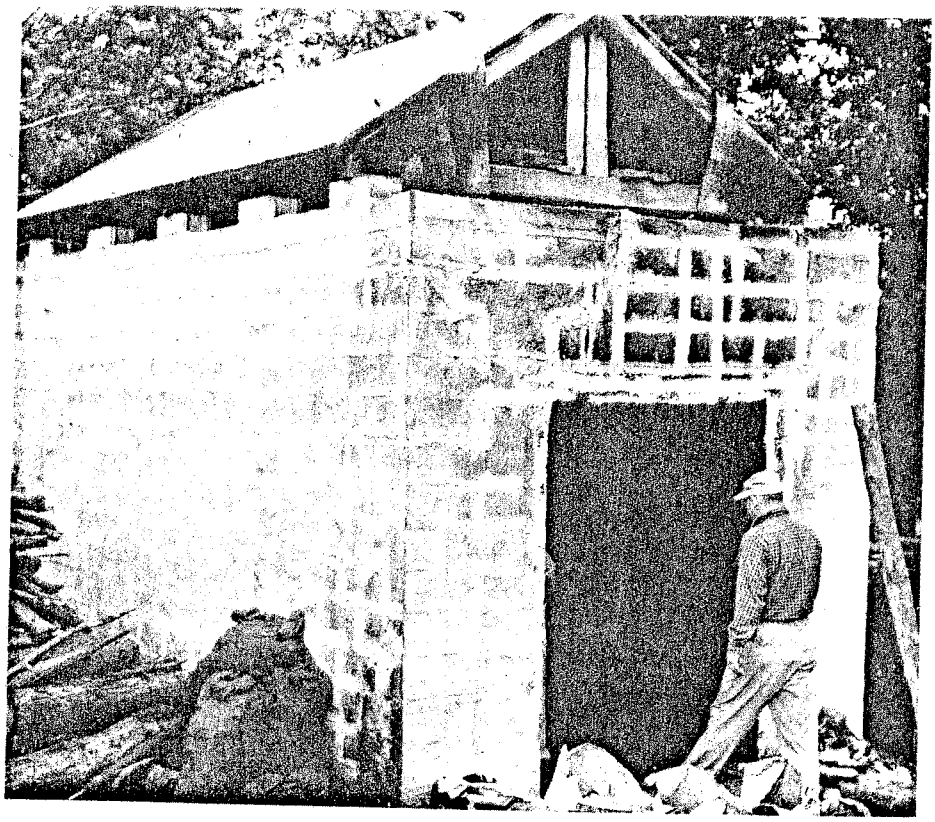

The cinder-block kiln is well suited for small charcoal operations. This kiln has a capacity of 9 cords.

The front end is left open for a door of the size needed for the method of loading used. If loading is to be done by hand, the doorway may be 6 by 8 feet, with a sturdy reinforced cinder-block lintel at the top extending the full width of the kiln. If loading is to be done by fork-lift, the door should be the full width and height of the kiln.

An outlet for the smoke and vapors is provided at the bottom of the rear end of the kiln. It leads into a sturdy chimney, which may be made of vitreous tile or steel pipe. Along the bottoms of each of the side walls, air inlet openings are left at about 4-foot intervals.

The roof can be made of 16-gage corrugated iron, supported by 3-inch double-strength pipe spaced at 16-inch

intervals. Over this roof about 6 inches of dry sand or dirt is spread to act as an insulator and seal against the escape of gases. For a 10-foot-wide kiln some form of center support is needed for such a roof. This may be provided by a superstructure of wooden rafters, from the centers of which ½-inch steel rods are suspended; these go through holes in the corrugated iron and encircle the pipes. A second corrugated-iron roof over the rafters will protect this insulation from wetting during the winter or rainy weather. Two vents about 10 inches in diameter are cut through the front end of the roof, just in back of the door.

Loading The Kiln

The kiln is loaded by placing stringers of round or square wood about 4 inches thick on the floor to provide support for the piles and ventilation under them. The stringers should not block the air-inlet ports. The charge of wood may be piled either crosswise or length-wise of the kiln. The method of piling will dictate the direction and spacing of the stringers.

At the rear of the kiln, over the smoke outlet, a piece of heavy-gage ½-inch mesh hardware cloth is placed to prevent charcoal from falling into this outlet and blocking it.

The charge of wood should be piled as compactly as possible, from floor to roof, except for a space within about 2 feet of the door. In this space, dry kindling and "brands" (incompletely carbonized wood from previous burns) are piled to set off the burn. Many operators soak this kindling with oil. Used crankcase oil is satisfactory: the higher grades of furnace oil are somewhat dangerous to use.

Most Northeastern operators close the door opening by erecting a cinder-block wall in it and sealing the joints with lime mortar. Some use steel or composition doors similarly sealed.

Burning Process

After the kiln is loaded and the door opening is closed, the kindling is ignited with some oil-soaked rags

tied around the end of a pole let down through a roof vent. Only the front pair of air inlets is left open. The kindling is allowed to burn in the draft created through these vents for half to three quarters of an hour or until it is completely ignited. Then these vents are closed, and the gases are forced to escape through the chimney at the rear of the kiln.

As carbonization proceeds, the side air inlets are opened progressively toward the rear of the kiln. Control of burning is obtained almost entirely by opening or closing these air inlets at the sides of the kiln. Too hot a burn calls for partially closing some of these inlets, usually by piling dirt in them; too slow a burn calls for opening them wider.

Most operators gage kiln temperatures by feeling the walls and watching the type of smoke emitted. Thick white smoke means the wood is drying; yellowish heavy smoke means carbonization is proceeding; and thin blue smoke means the wood is burning up instead of carbonizing.

Recently an inexpensive but more accurate method of gaging temperatures in a cinder-block kiln has been developed by the Southeastern Forest Experiment Station.[4] This involves use of an inexpensive standard brand DC electric microammeter wired to home-made thermocouples placed at three places near the top of the kiln. Use of such equipment should aid materially in getting a fast and good burn.

When carbonization is complete at any point, a red glow shows in the air inlets. This is a signal that the inlet should be completely blocked off. Automatic inlet closers are being experimented with. Carbonization of the charge in a 9-cord kiln is usually complete in about 48 hours. When complete, the kiln must be thoroughly sealed so that it is airtight, and left to cool.

Cooling Period

Cooling of a 9-cord kiln takes 6 days, more-or-less, depending on weather conditions. Operators have given much

[4]Ralph, Peter. An inexpensive method for measuring charcoal kiln temperatures. U.S. Forest Serv. Southeast. Forest Expt. Sta. 9 pp., illus. 1956.

HEAT EXCHANGER

(3 OLD 50-GAL. OIL DRUMS WELDED TOGETHER)

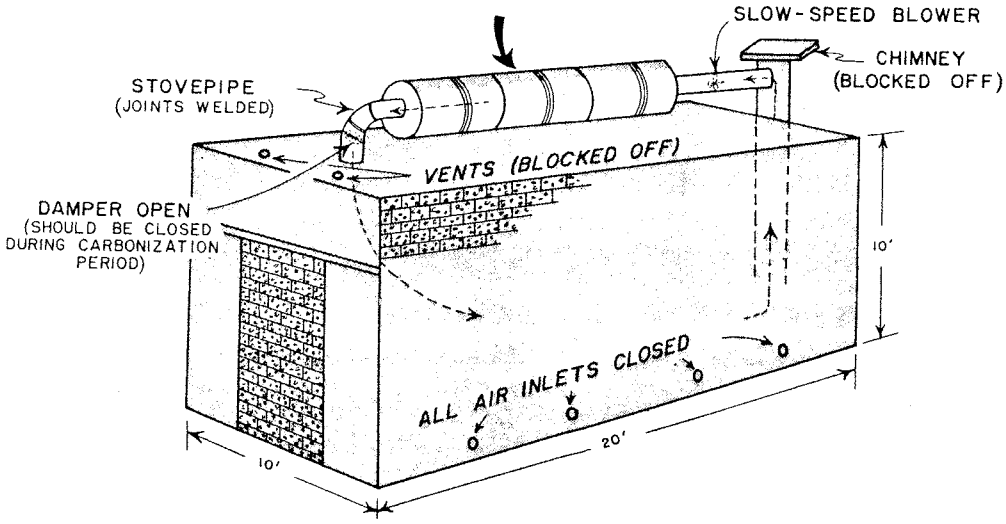

Details of the heat exchanger used to speed the cooling-off process in a 9-cord cinder-block kiln.

attention to methods of accelerating cooling. The most promising method is a heat exchanger and blower mounted on top of the kiln. This circulates the inert gases present during the sealed-off cooling period, and by dissipating the heat it reduces cooling time by approximately 3 days.

Unloading & Packaging

When the charge is cool, the door of the kiln is opened and the charcoal is unloaded and packaged for shipment. A common method of doing this is to have one man inside the kiln lift the charcoal with an onion fork into the upper end of a portable cylindrical sloping screen, about 2 feet in diameter and 6 feet long, made of ½-inch mesh hardware cloth. A second man at the lower end revolves this screen by hand, and breaks up the larger lumps of charcoal with a small stick. A funnel at the lower end of the screen directs the charcoal into a paper bag. A small kitchen scale is used to check the weight of filled bags.

Three men (one inside the kiln and two outside) can unload and package the yield of a 9-cord kiln (about 3 tons of charcoal) in a day by this method. Generally the amount of unsalable fines developed in each such kiln in a good burn is so small that it can be hauled away to a dump in a wheelbarrow.

Maintenance Of Kilns

Considerable repair work is usually necessary on cinder-block kilns, especially during the first few burns. Cracks open up in the structure during the carbonization period. It is essential that these be blocked up with lime mortar immediately, to prevent air from getting in.

Sometimes outside reinforcement of the walls is necessary, especially when the initial foundation is inadequate. Wooden props and steel rods have been used for this purpose. One experienced operator of this type of kiln has found that the average cost of repair and depreciation, over a period of years, has been $9 per burn.

Costs & Returns

Yields of salable lump charcoal from dry hardwood slabs and edgings or green round wood average slightly more than 700 pounds per cord. It is convenient to figure that 1 ton of charcoal will be obtained from about 3 cords of such wood, or 3 tons from a burn in a 9-cord kiln. On this type of operation, typical 1957 costs per burn, using hand labor, would be about as follows:

Wood cost (9 cords slabwood at $7 delivered)	$ 63
Repair and depreciation on kiln, per burn	9
Hand loading (6 man-hours)	9
Kiln operation (2 man-hours)	3
Unloading and sacking (24 man-hours)	36
Miscellaneous supplies (oil, mortar, etc.)	20
Other costs:	
Sacks (1,500 at 2 cents each)	30
Delivery, supervision, sales	30
Interest, land rental, etc.	40
Total costs	$ 240

Returns will be:

Three tons packaged charcoal at $100 per ton, delivered.....	$ 300
Margin for profit and risk (per burn)	$ 60
Margin for 7-kiln installation per month (22 burns)	$1,320

Such an installation, if operated on a 12-month basis, would require about 2,400 cords of slabwood a year, and would yield about 800 tons of charcoal. It must depend primarily on local markets. For as indicated above, the production cost is $80 a ton, or $20 more than the average price received for bulk charcoal.

BEEHIVE KILN

Erection and operation of a larger brick beehive-kiln installation, which could profitably manufacture charcoal for distant bulk markets, is described below. A battery of five 90-cord kilns appears to be a good economic unit.

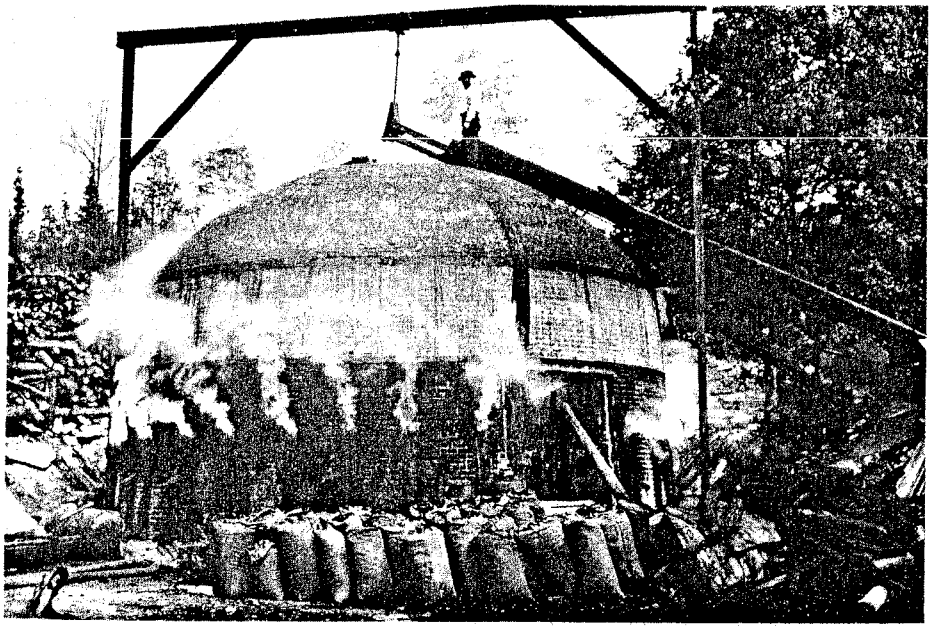

A beehive-type charcoal kiln made of brick. A kiln this size has a capacity of about 45 cords.

Construction Of Kiln

A typical beehive-kiln, designed specifically for charcoal production,[5] is about 30 feet inside diameter and has 12-inch thick brick walls 15 feet high. The dome rises about $3\frac{1}{2}$ feet above these walls, giving a total height of $18\frac{1}{2}$ feet. Around the top of the walls is a steel band 12-inches high and $\frac{1}{2}$-inch thick to provide support at this critical point. The whole kiln is erected on a foundation of poured reinforced concrete, about 12-inches thick. Footings for the wall should go well below the local frost line. The cost of each kiln is about $10,000. In some places old brick-manufacturing kilns are being used effectively. Total investment for a battery of five such kilns, including packaging and storage facilities, would be about $75,000.

Operation

Most operators today load these kilns with slabwood, because, as indicated previously, it is generally less expensive and more satisfactory than round wood. At the center of the bottom of the charge, a pile of kindling and brands is placed. Around this is piled the tightly packed slabwood, from the floor to the dome of the kiln. The door is usually closed with a $\frac{1}{2}$-inch thick steel plate. Control of burning is handled by closing or opening a series of vents at several heights.

A burn in a 90-cord kiln takes about a month, including about 4 days for loading, 7 days for carbonization, 12 to 14 days for cooling, and 6 days for unloading. A crew of five men, including the burner, is adequate to operate a battery of five such kilns if the product is packaged in bushel or $1\frac{1}{2}$-bushel bags. The burner must be a skilled and experienced man.

When the product is packed in bushel or $1\frac{1}{2}$-bushel bags, these large kilns are generally unloaded by scooping the charcoal directly into the bags with an onion fork. Very little attempt is made to break up the larger chunks. The finer material is then shoveled up onto a sloping wire-mesh screen ($\frac{1}{4}$-inch mesh) similar to that used by a mason. The coarser particles, which slide down over the surface of the

[5] These kins are individually designed. No standard plans are available.

screen, are also shoveled into the bags. The fine material, which goes through the screen, is generally taken out and dumped, or used for land fill. It rarely amounts to more than ½ ton per burn in a 90-cord kiln. The yield of salable charcoal is about 30 tons. In addition, about 5 cords of brands are recovered at the base of the pile, and they can be used in the next charge.

Charcoal dust becomes very thick in the air inside a 90-cord kiln during unloading.. An exhaust fan should be provided to remove the dust-laden air and bring in a supply of fresh outside air.

Thus with a total payroll of five men, this installation can produce about 7 tons of charcoal per average day, as contrasted with the 3 tons produced by a crew of four men operating the cinder-block kiln previously described. This production rate is based on packaging only in the large-sized bags, however. If the product were put up in small sacks, two additional men would be needed.

Annual wood requirements, for operating on a 12-month basis, would be about 5,400 cords; and output of salable charcoal would be about 1,800 tons.

Shipping Cautions

If the charcoal from such an operation is to be shipped across state lines on a common carrier, special ICC regulations governing such shipments should be studied and carefully followed.

In any case, the freshly bagged charcoal should be held under cover at the kiln site for at least 48 hours, to allow it to come into equilibrium with the moisture content of the air.

Costs & Returns

The typical 1957 costs and returns per burn for operating each beehive kiln might be about as follows:

Wood cost (90 cords at $7 delivered)	$ 630
Repair and depreciation on kiln	100
Loading (70 man-hours at $1.50)	105

Kiln operation (10 man-hours at $1.50)	15
Unloading & sacking (120 man-hours at $1.50)	180
Miscellaneous supplies	200
Other costs (supervision, sales, land rental, taxes, etc.)	200
Total costs	$1,430
Returns (30 tons at $60. f.o.b. plant)	$1,800
Margin for profit and risk (per burn)	370
Margin per month (5 burns)	1,850

The operator of such an installation could sell his charcoal f.o.b. in bulk at $60 a ton, and have a margin of $370 a burn for profit and risk. If the charcoal were packaged and delivered to local markets at $100 a ton, costs on a per-burn basis might be increased as much as $600, but returns would be increased $1,200. Very few communities afford local markets that will absorb this quantity of charcoal, however.

BRIQUETTING

Since much charcoal is sold as briquettes, some prospective producers may be interested in the briquetting process. Charcoal briquettes are generally made by combining about 73 percent of crushed charcoal, 4 percent starch, and 23 percent water, by weight; forming this mixture into briquettes in a special machine; and then drying these in a heated chamber.

Probably the minimum size of an economical briquetting plant is 1 ton per hour, or 8 tons per 8-hour shift. This is the capacity of one modern briquette-forming machine, which will cost about $10,000. However, this is only part of the equipment needed. Below is a list of the major items of equipment needed for such a plant, together with their current (1957) price, as provided by a leading U. S. manufacturer:

Item	
1 - Paddle mixer	$ 1,500
2 - Two-shaft vertical fluxer	6,825
3 - Charcoal mixture conveyor	2,500
4 - Briquette press and feeder ...	8,190
5 - Discharge conveyor	400
6 - Briquette dryer	18,000